KS1161,2,5,8PKX
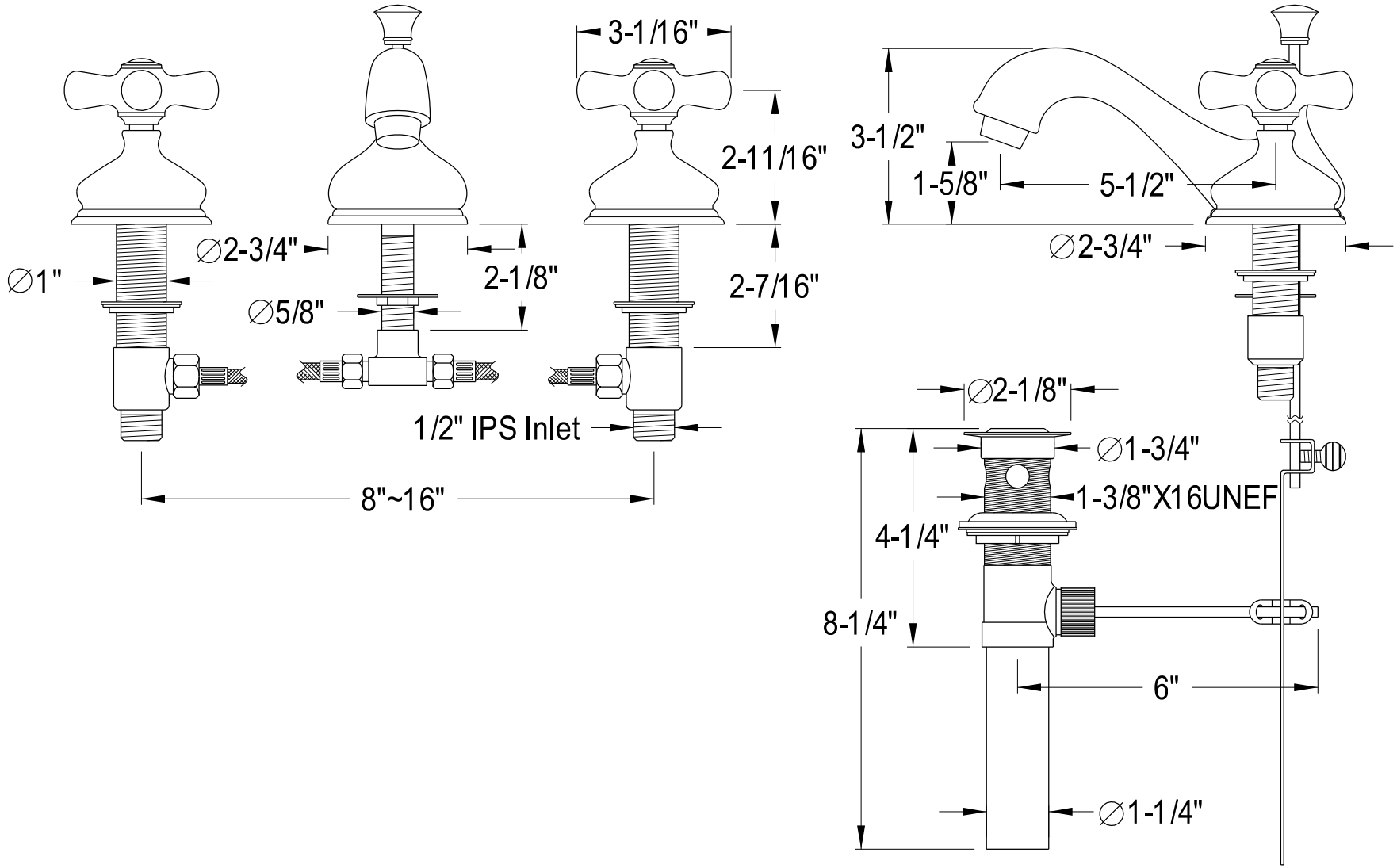
Widespread Lavatory Faucet With Brass Pop-Up