KS7990,1,2,3,5,7,8TAL
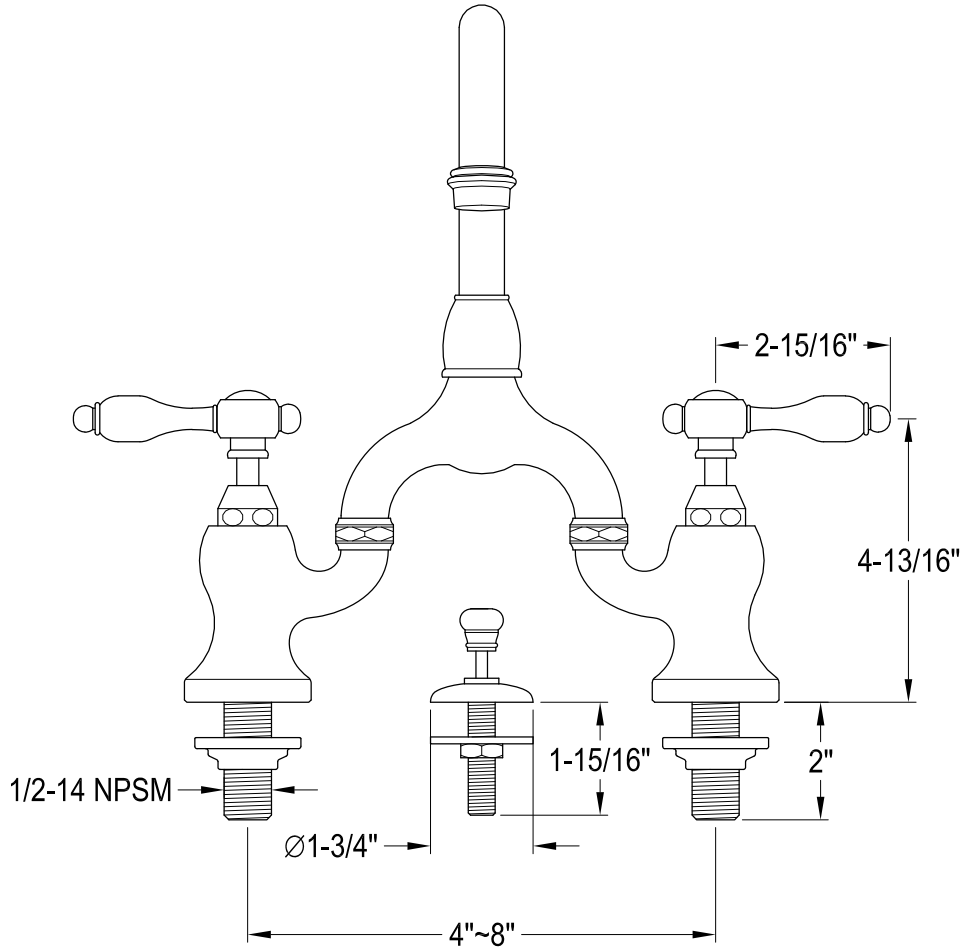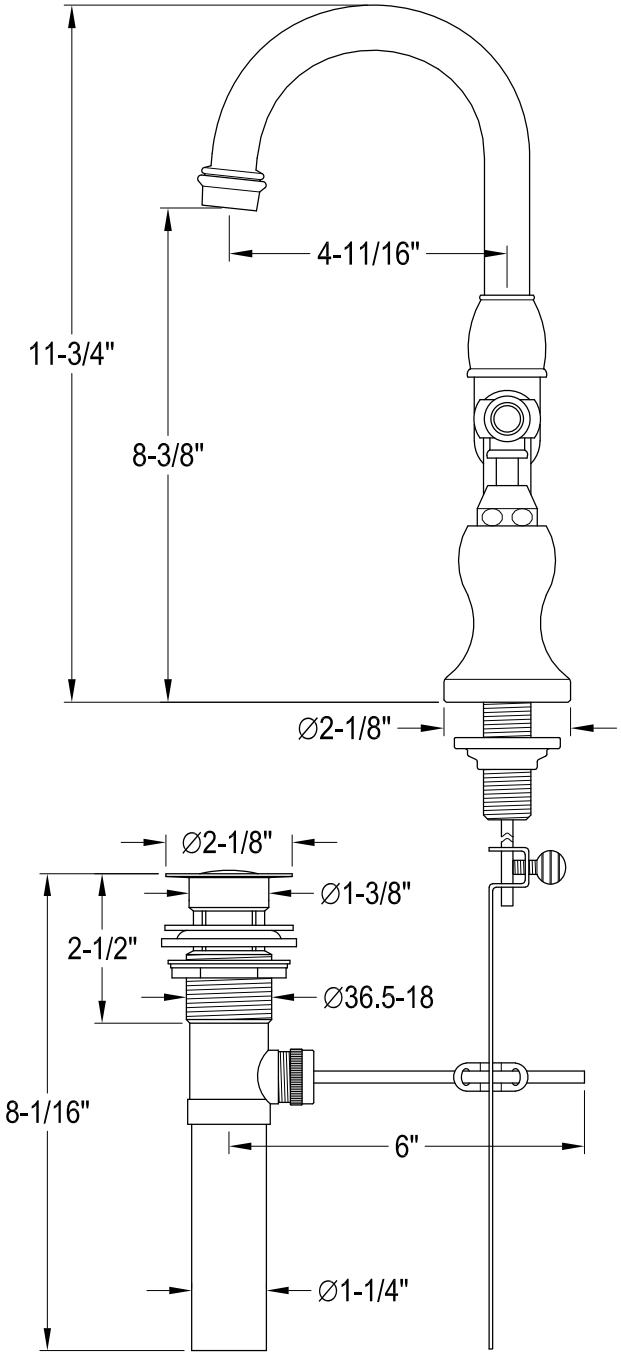
Twin Handles Lavatory Bridge Faucet with Brass Pop-Up