KS2330,1,3,4,7,8RKX
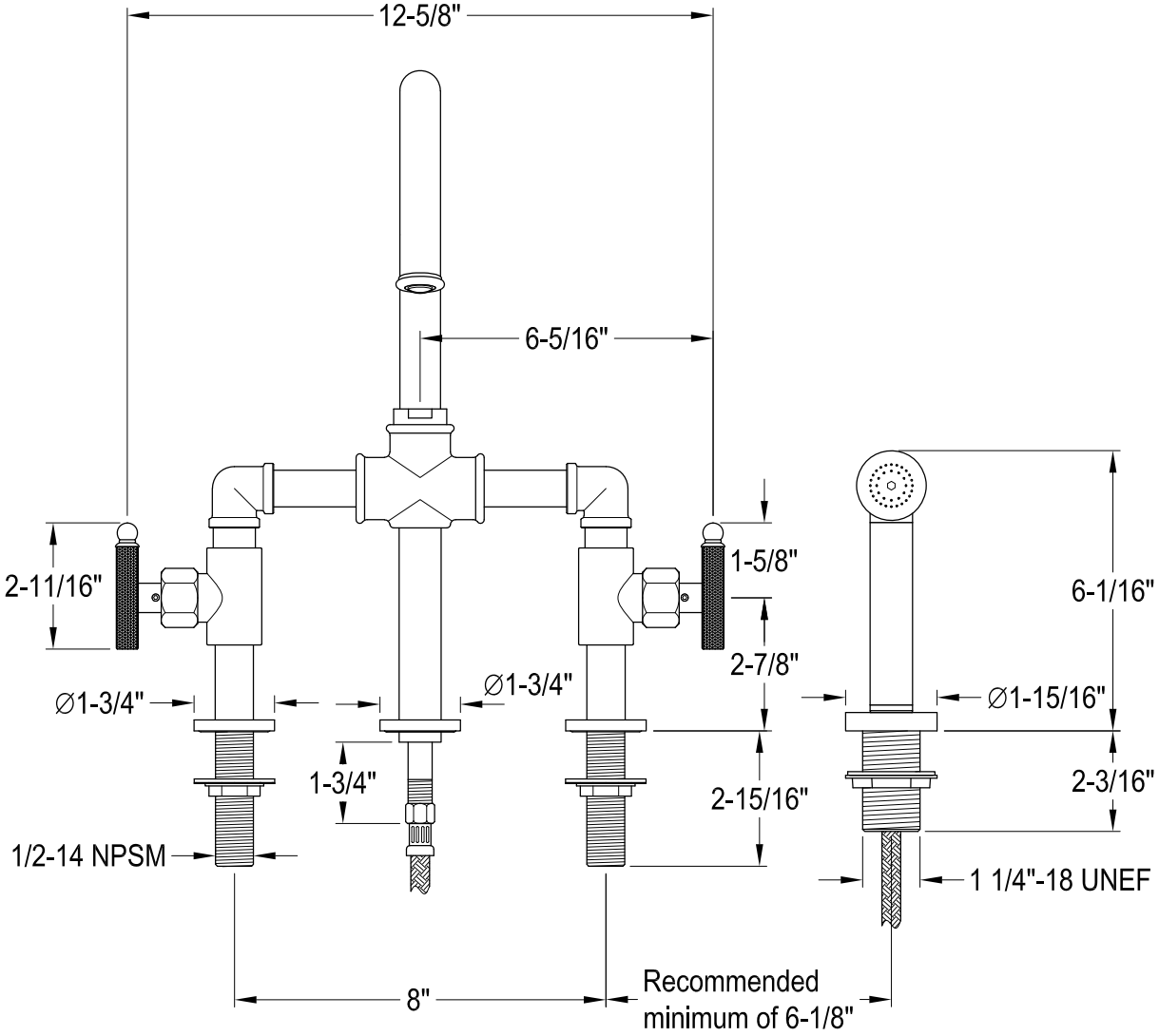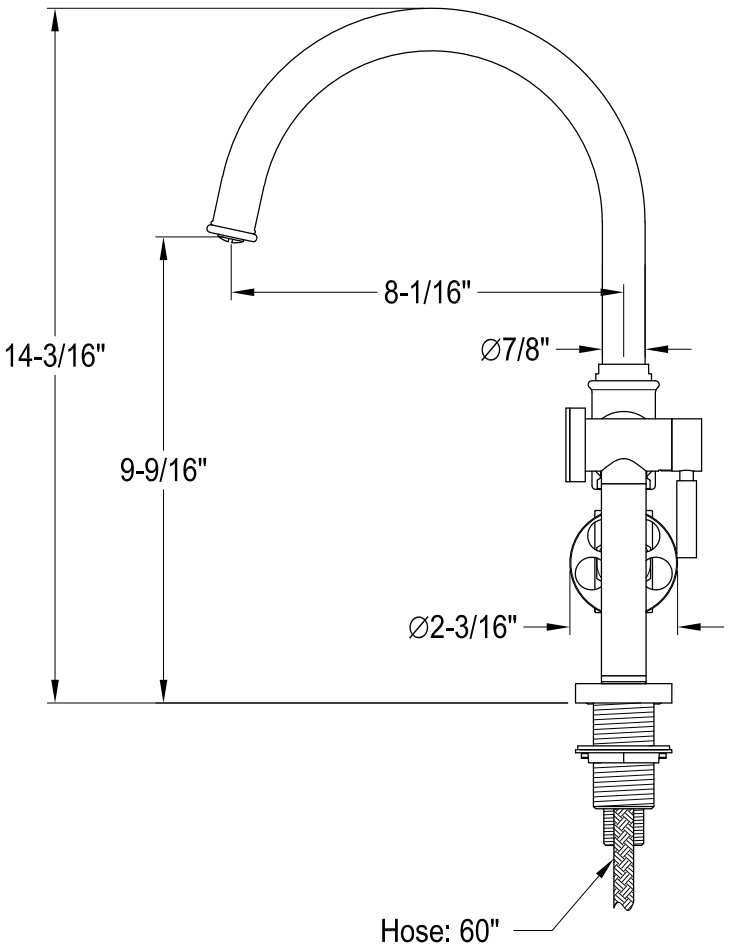
Twin Handles Bridge Kitchen Faucet With Brass Sprayer