KF4410,MB,PB,ORB,SN
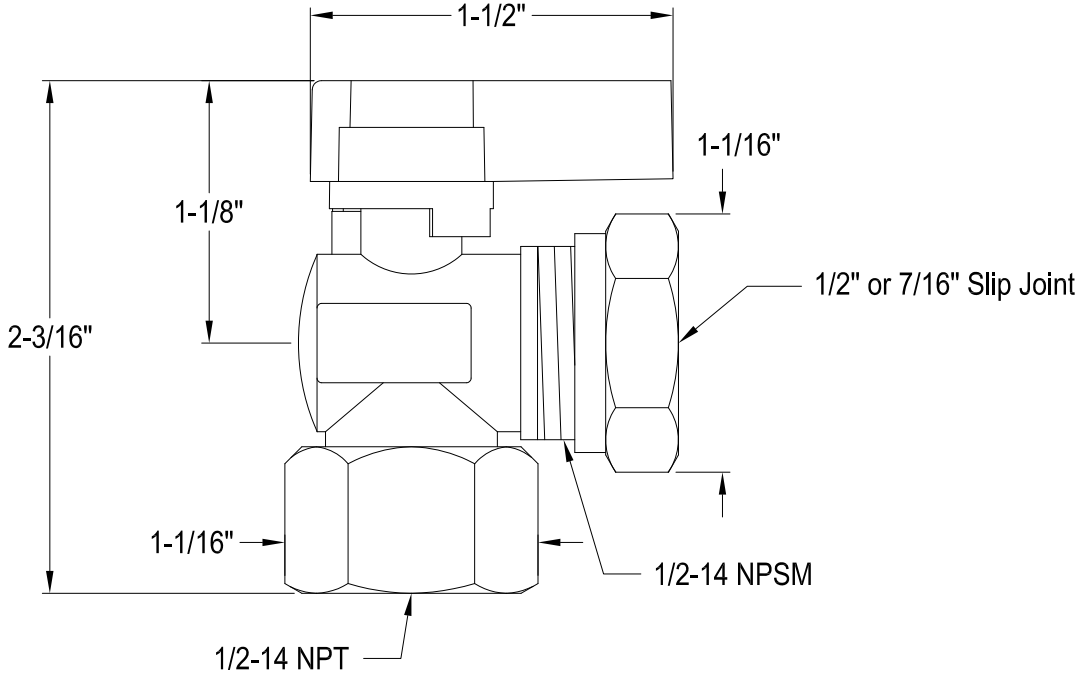
Quarter Turn Valves, 1/2" FIP x 1/2" or 7/16" Slip Joint