DTTA2161,2
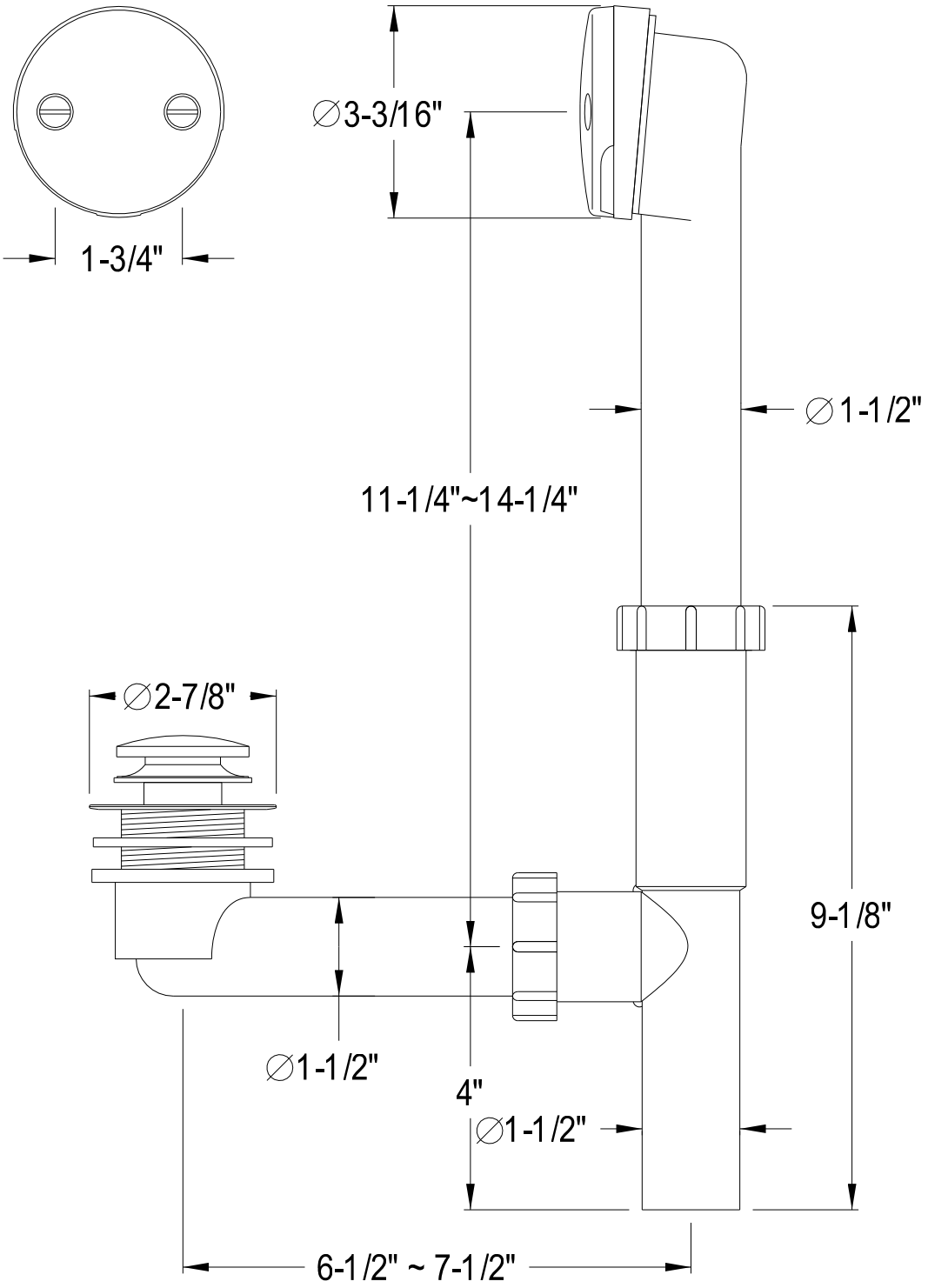
16" Tip Toe Waste & Overflow